ADA MP-1

MOD3.666

R. Metzger
G. Philippe

with contributions from:
M. Howell

Introduction:

First off, I would like to thank Mark Howell. Mark was truly the first guy to break ground with a great sounding and fairly simple mod for the MP-1, the **MOD3**.

I personally would never have attempted to mod my MP-1 in the past to change it's tone if it wasn't for how great this mod sounded. Very inspiring!

I named this mod accordingly because it is simply a next generation, beefed-up ("evil-er") version of the original **MOD3**.

Hats off to you Mark!

Here is a quick overview of the MOD3.666:

The goal of this particular mod was to address some of the issues people were having with the original **MOD3** circuit. MarshallJMP and I completed the tube-board circuit to more comprehensively match the **Dual-Rectifier** preamp section. We also tweaked the input gain stage circuit to increase the "shredable" gain and modded the EQ sub-circuits to more closely match the EQ points on an actual **Dual-Rectifier** Head. Custom trimpots were added that allow setting of the maximum amount of mid-range frequency attenuation. Another trimpot was added that sets the bass frequency roll-off of the MP-1 Bass Control. This helps ensure that the bass ("thump") is as tight as hell-ishly possible.

There are three procedures involved in this mod:

1) Modding the **Tube-Board Components.**
2) Modding the **Input Stage Gain Circuit Components**.
3) Modding the **EQ Section** and adding the **Custom Trimpots.**

The positive points about this mod are:

a) Your MP-1 will sound sickly similar to a **Mesa Dual-Rectifier** Amp Head with the right combination of settings and poweramp/cabinet.
b) The mod is very tweak-able, right down to matching the resonant frequency of your speaker cab.
c) The mod is totally reversible.

The negative points are:

a) Your MP-1 will sound like a Mesa.
b) Your friend who paid way too much for his **Triaxis** will put a hit out on you.
c) Since the Tube-Board and EQ sub-circuits have been modded, the tone of the other channels (Solid State, Clean-Tube) will also change. The Clean-Tube channel will not be very clean anymore. This is actually a good thing for some of us that only use the Solid-State channel for clean tone. The Clean-Tube channel will crunch up *very* nicely.

Mark Howell stated this in one of his posts concerning a previous mod, the **MOD3.1**:

> OD1 has to be low (about 1) and OD2 has to be high (8 or more), but it's still clean. And I discovered this: if both ODs are on 10 with tube clean, you get a nice bluesy distortion, kinda like a cranked JTM 45.

d) Mesa's are not known for their lead tone, with that in mind your lead tone may suffer.

Here is a great quote from a member on the **ADA Depot Forum** that sums it up *VERY* nicely**:**

SlamminSalmon wrote:

> Dual-Rectifiers have KILLER rhythm tones, but man, if solos sound like Metallica... I can't believe people WANT Kirk Hammett's solo tone!

e) Even though there is nothing truly hard about performing this mod, there are quite a few parts to replace. Be sure to set aside an entire afternoon or evening if you plan on finishing this in one sitting.
f) The gain of the entire circuit has been increased dramatically, which leads us to this dilemma:

Increased Gain = Increased Noise

We have all lived this. A **Rocktron HUSH** unit is your friend.

The MOD3.666 involves 13 steps:

1. Acquiring Parts
2. Removing the **Top** and **Bottom Panel**
3. Detaching the **Tube-Board Stand-offs**
4. Removing the **Tube-Board Components** to be Replaced
5. Installing the **Replacement Resistors** on the **Tube-Board**
6. Installing the **Replacement Capacitors** on the **Tube-Board**
7. Installing the **Replacement OD2 Control Wire** and re-attaching the **Tube-Board** to the chassis
8. Removing Resistor **R74** and the **OD1 Trimpot (T2)** from the **main PCB**
9. Installing a Jumper Wire in place of **R74** and replacing **T2** with a higher value
10. Removing the **EQ Section Components** to be Replaced
11. Installing the **Replacement Resistors** and **Capacitors** to the **EQ Section**
12. Installing the **Custom Trimpots** to the **EQ Section**
13. Tweaking the **Custom Trimpots**

I have also included an Appendix that lists all the color code values for both **Carbon Composition (5%)** and **Metal Film (1%)** resistors that are used in this mod. The codes for the various capacitors are also listed.

ENJOY!

-HB

Step 1: Acquiring Parts

There are a lot of replacement parts to gather for this mod. Your only viable option to acquiring all the correct parts at a reasonable price is definitely mail order.

Mouser Electronics is the way to go. I have included Mouser part numbers for all the critical parts required. There should be no question if you have gotten the right part or not.

Mouser is a great part source. They have a great printed catalog and website, and they also do not charge a per-order minimum.

Here is their website address: **http://www.mouser.com**

Tube-Board Replacement Components:

(2) 1/4W 1% 220k Metal-Film Resistor	**#271-220k**
(1) 1/4W 1% 39k Metal-Film Resistor	**#271-39k**
(1) 1/4W 1% 470k Metal-Film Resistor	**#271-470k**
(1) 1/4W 1% 1M Metal-Film Resistor	**#271-1.0M**
(2) 1/4W 1% 47k Metal-Film Resistor	**#271-47k**
(1) 1/4W 1% 330k Metal-Film Resistor	**#271-330k**
(1) 1/4W 1% 2.2M Metal-Film Resistor	**#271-2.2M**
(1) 1/4W 1% 680k Metal-Film Resistor	**#271-680k**
(3) 1µF 50v Electrolytic Capacitor	**#140-XRL50V1.0**
(1) 0.001µF 200v Polyester Capacitor	**#140-PF2D102K**
(1) 0.0022µF 200v Polyester Capacitor	**#140-PF2D222K**
(4) 0.022µF 200v Polyester Capacitor	**#140-PF2D223K**

Alternately, you can substitute the **0.022µF** caps listed above with **Mallory 150s** if you want some of the best sounding tone caps available. These caps are more expensive and are usually in high-demand. Mouser is also constantly selling out of these. If you plan on getting your parts from Mouser and these caps are in stock, by all means go for it! They are Mouser Part **#539-150630V.022J.** You will need 4.

You will need about **10”** of **shielded 24AWG** or **26AWG wire (RG174 Coax)** to replace the **OD2 Control Wire.** I wish I could tell where to get this in low quantities but I can’t. Mouser sells **RG174 wire** but in spools of 100’ or more I believe. It is obviously not worth buying a whole spool. I’ve seen people chop the ends off **RCA stereo patch cords** and use these, they should work just fine.

You will also need some **small diameter heat-shrink tubing** to seal the ends of the replacement **OD2 Control Wire,** you can get these at any **Radio Shack** store. Just be sure NOT to ask about their latest cellular phone deal if you want to get in and out of there quick.

Input Stage Gain Circuit Replacement Components:

(1) 500k Horizontal Single-Turn 4.5mm Trimpot	**#32RH505**

24AWG Pre-tinned Bus Jumper Wire. You can also get this at **Rat Shack** if you don’t have any extra lying around. It is catalog **#278-1341.** You can also use the excess snipped leads from the resistors.

EQ Section Replacement Components:

(1) 1/4W 1% 13k Metal-Film Resistor	**#271-13k**
(2) 1/4W 1% 8.2k Metal-Film Resistor	**#271-8.2k**
(1) 1/4W 1% 6.8k Metal-Film Resistor	**#271-6.8k**
(2) 0.033µF 100v Polyester Capacitor	**#140-PM2A333K**
(1) 10k 3/8" Square Cermet Trimpot ("BASS-WARP")	**#72-T20YP-10K**
(1) 2k 3/8" Square Cermet Trimpot ("MID-SCOOP")	**#72-T20YP-2K**

You can also use **1/4W Carbon Resistors** in place of the **1/4W Metal Film Resistors** if you are feeling ghetto. They are cheaper, are of lesser quality, and stray a little more in tolerance, but they will work just fine. Just substitute "**#291-**" in place of "**#271-**" in the Mouser resistor part number.

Note:
Since you will be replacing parts on the tube-board, this may just be the time to replace the tube-board filter caps if you haven't done so already. Here are the recommended lower noise substitutes, as previously documented in the "**Noise-Mod**".

(1) Nichicon 22uF/450v High-Temp Radial Electrolytic (C1)	**#647-UVZ2W220MHH**
(2) Nichicon 100uF/250v High-Temp Radial Electrolytic (C2, C8)	**#647-UVZ2E101MHH**

Disclaimer:
If you do decide to substitute parts, I can not guarantee that they will have the same affect on the final result of this mod, nor can I guarantee that the parts will physically fit as replacements.

Step 2: Removing the Top and Bottom Panel

There are 9 counter-sunk machine screws on both the top and bottom panels that must be removed.

Top Panel screw locations

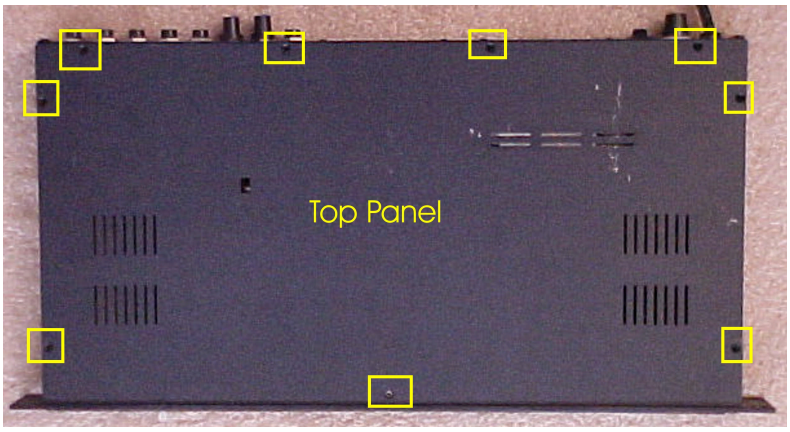

Bottom Panel Screw Locations

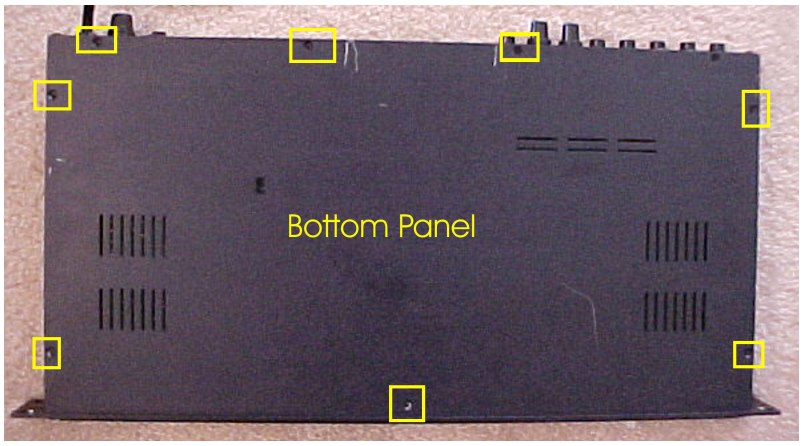

Be careful taking the panels off because there is a lip on both the top and bottom of the front panel that helps keep all the panels flush. Pull the panels out from the back of the unit, don't lift them out.

When re-attaching both panels, be sure to slide the panels into the lip and confirm all screw holes are in the correct locations. Be forewarned, these panel screws strip easily, especially if you accidentally cross-thread one.

Here is a pic of the front panel lip

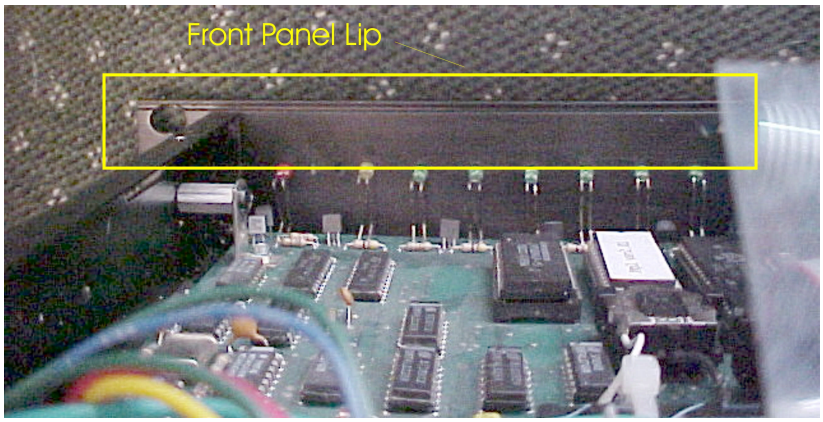

After removing the top panel, **REMOVE THE TUBES!**

This will avoid any incidental damage and will also give you more room to work with.

Step 3: Detaching the Tube-Board Stand-offs

Detaching the Tube-Board requires you to remove three screws. Once the Tube-Board is detached, you can flip the board up and work on it from there. You don't have to worry too much about breaking a wire off from a solder-pad, they are all attached pretty securely.

Remove these screws from the left side of the unit

Remove this screw from the underside of the unit

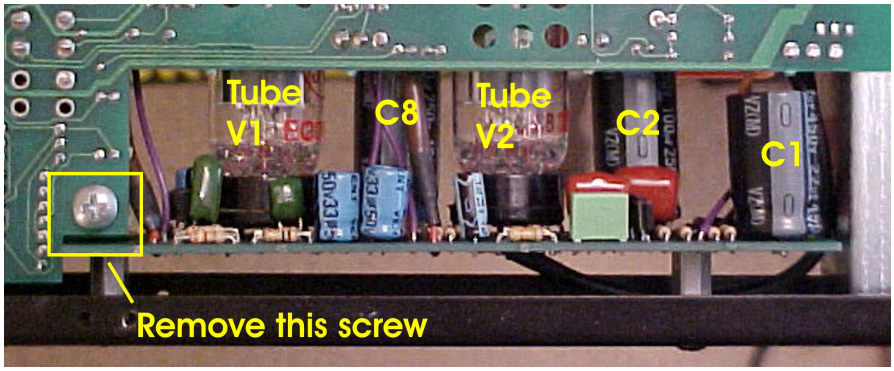

From here, you should be able to orient the Tube-Board so you can work on it comfortably.

Step 4: Removing the Tube-Board Components to be Replaced

Here is the documented schematic for the **MOD3.666 Tube-Board** circuit:

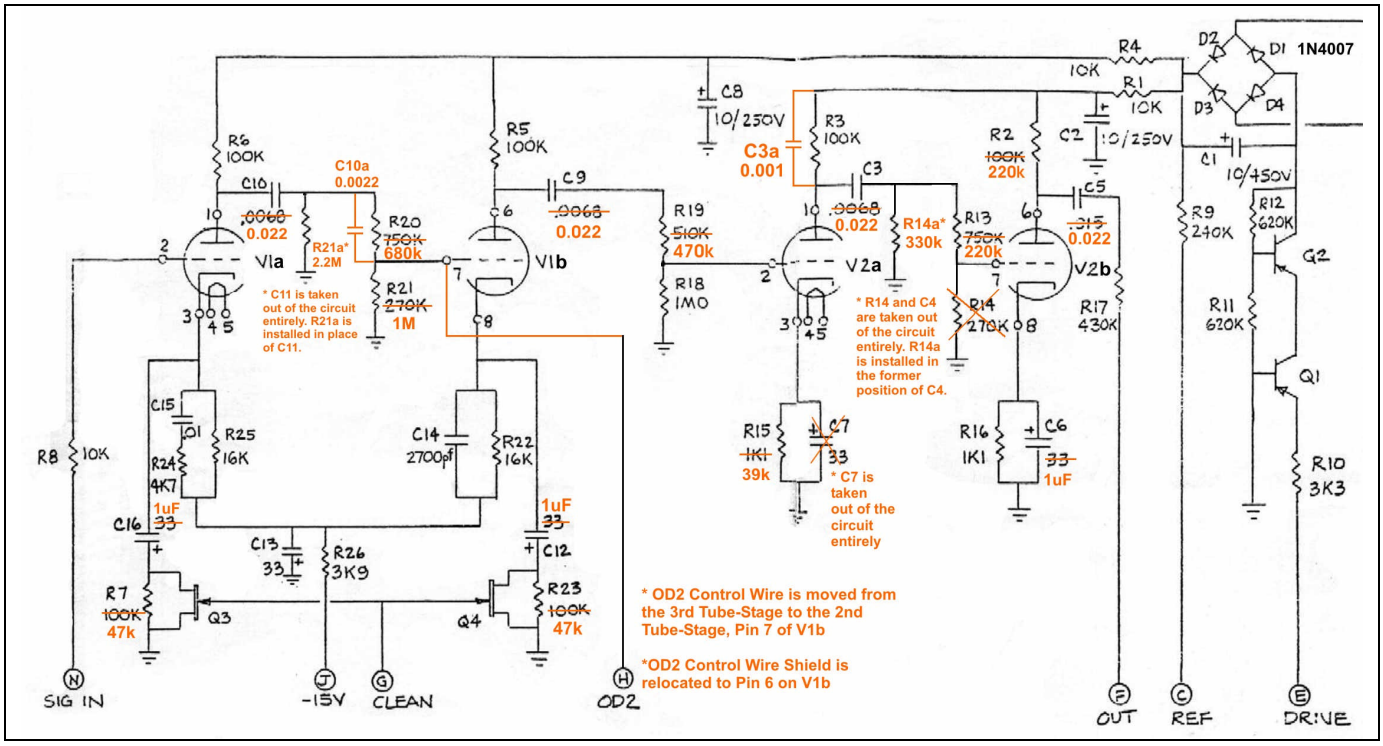

Keep in mind you do not need to know how to read schematics to do this mod. If you don't know how, now may be a great time to familiarize yourself with some of the component symbols. It could really help you out in the future if you need to repair another unit where the manufacturer isn't so helpful to newbies.

Here is a scan of a stock MP-1 Tube-Board removed from the unit with the components to be removed labeled. Please note the filter caps and all connecting wires have also been removed for clarity.

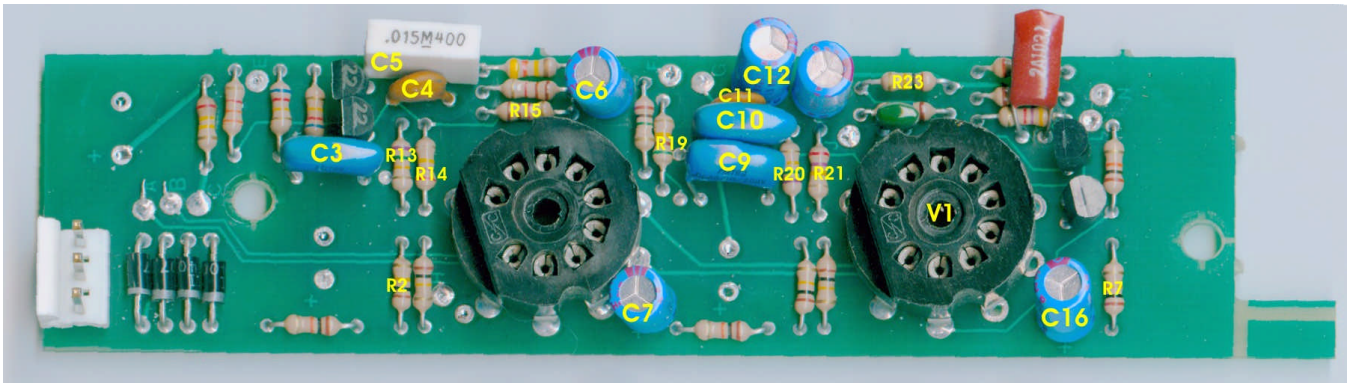

Before you get started removing the components from the Tube-Board, unsolder and remove the **OD2 Control Wire** from the main PCB and Tube-Board.

This wire will be replaced in a following step with a longer one.

This will help in giving you more room to work with

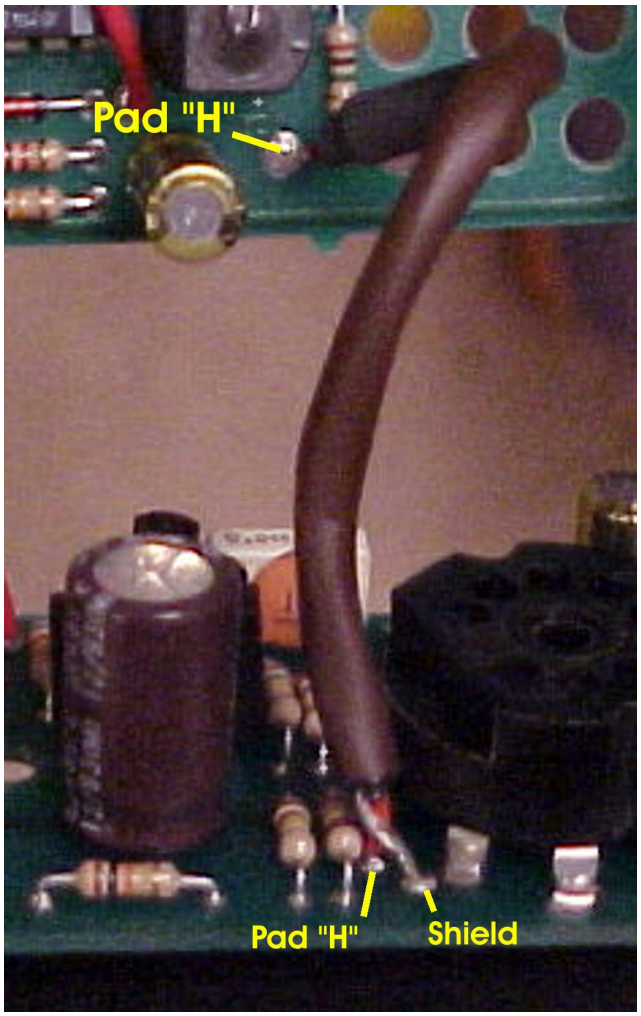

Here is another pic of an MP-1 Tube-Board with the components already removed and the pad holes thoroughly cleaned of excess solder:

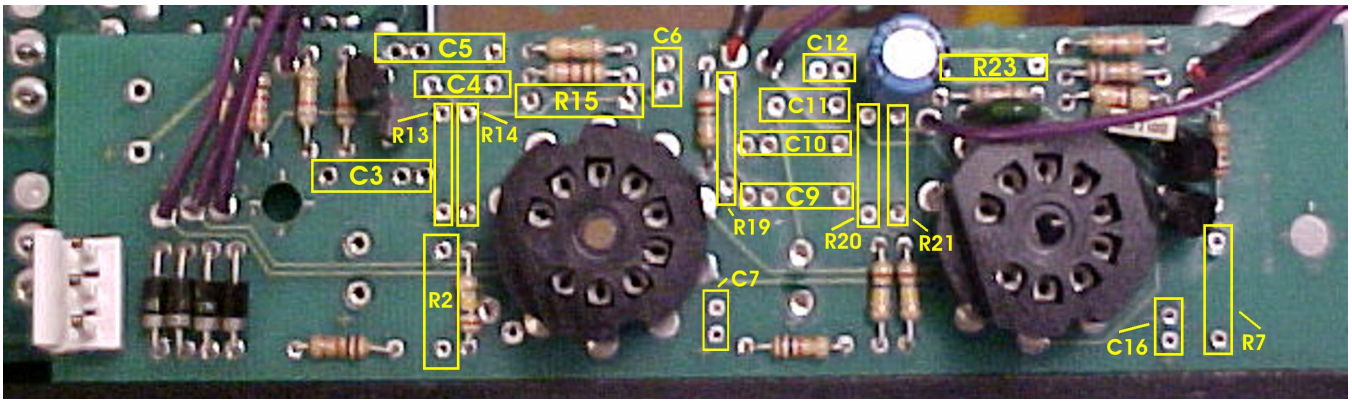

When you are removing the Tube-Board components, be very careful and take your time. The solder-sucker and de-soldering braid are great tools to prevent trace/pad lifting and/or damage to the Tube-Board PCB itself.

After the components are removed, continue using the de-soldering braid to completely open and clean-up the through-holes of any excess solder. Do this on both the component-side and the solder-side of the Tube-Board PCB. Doing this step properly makes the next few steps pretty easy.

Step 5: Installing the Replacement Resistors on the Tube-Board

As a rule of thumb when populating circuit boards, you always install the resistors before the capacitors or any standing components.

Here is a rundown of all replacement resistors on the Tube-Board and their values:

Component Label:	Original Value:	Replacement Value:
R13	750k	220k
R2	100k	220k
R15	1.1k	39k
R19	510k	470k
R21	270k	1M
R7	100k	47k
R23	100k	47k
R14a	Former location of **C4**	330k
R21a	Former location of **C11**	2.2M
R20	750k	680k
R14	270k	NONE

Here is what the Tube-Board looks like populated with the replacement resistors. All the replacement resistors I used were of Metal-Film composition, they are the “light-blue” resistors in the pic.

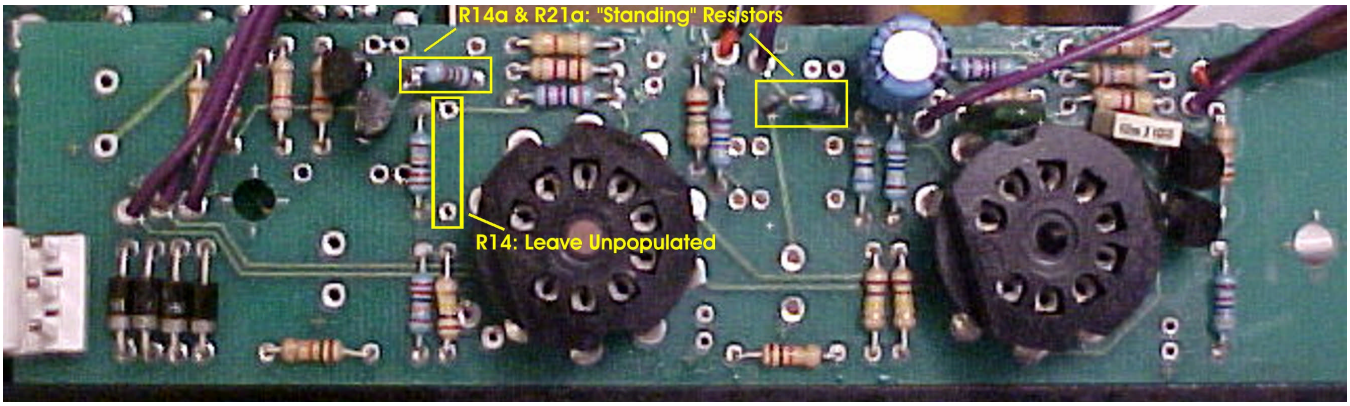

Here is left half of the Tube-Board in more detail

Hey Jamuke, does this Tube-Board look familiar? It should, it’s your’s!

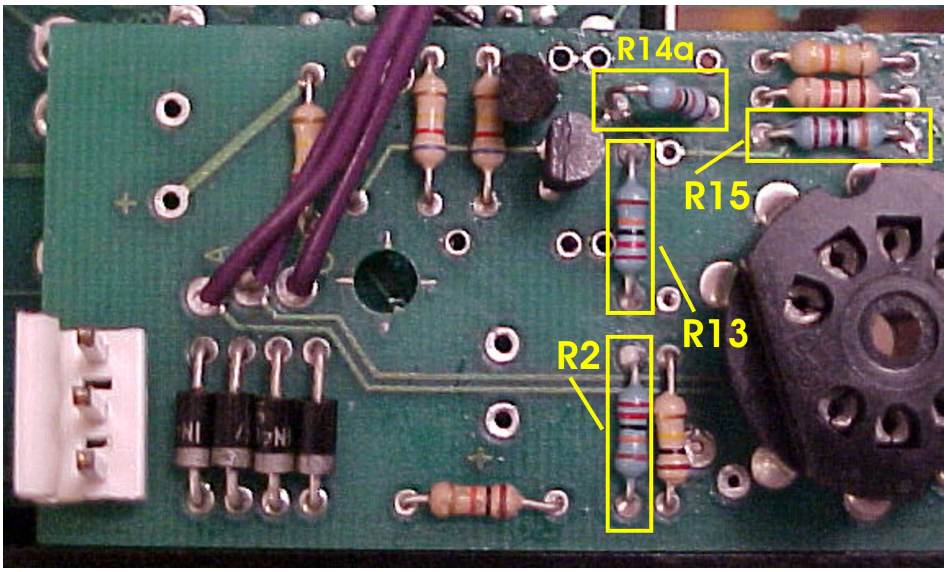

…and the right half

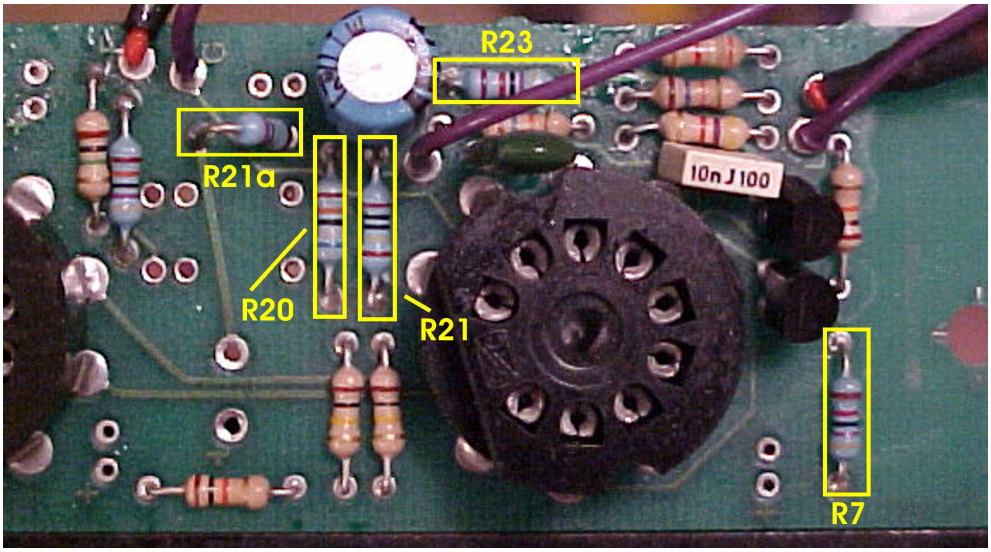

Resistor **R14a** is installed in the former location of **C4**.

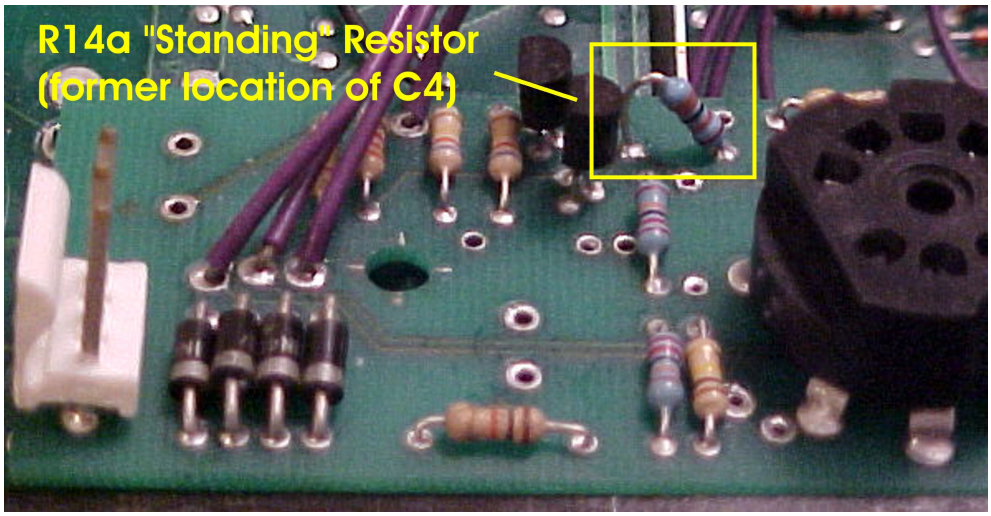

Because of the short lead-spacing we must use a technique called **"Standing"**. You place one lead of the resistor in a through hole and feed the other lead through until it becomes tight. Solder both leads at this point. The resistor literally **"Stands"** on end.

Use the same technique for resistor **R21a** which is installed in the former location of **C11.**

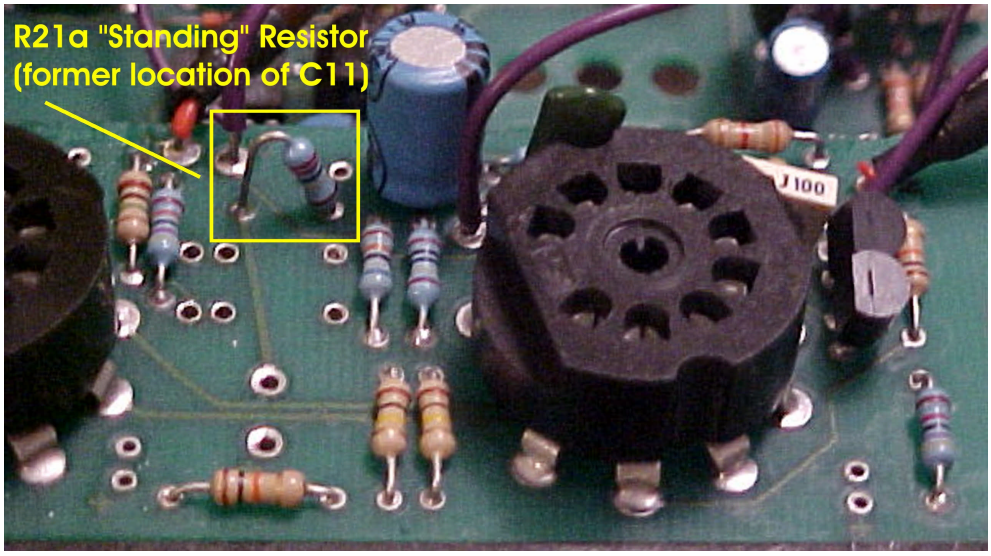

Step 6: Installing the Replacement Capacitors on the Tube-Board

Here is a list of all replacement capacitors and their values:

Component Label:	Original Value:	Replacement Value:
C10	0.0068µF	0.022µF/200v
C9	0.0068µF	0.022µF/200v
C3	0.0068µF	0.022µF/200v
C5	0.0068µF	0.022µF/200v
C6	33µF	1µF/50v
C16	33µF	1µF/50v
C12	33µF	1µF/50v
C10a	"Piggy-Backing" **R20**	0.0022µF/200v
C3a	"Piggy-Backing" **R3**	0.001µF/200v
C7	33µF	NONE

Note:
Capacitors **C3a** and **C10a** are installed **"Piggy-Backing"** resistors **R3** and **R20**. See the following page for more detail.

Here is the left half of the **Tube-Board** in detail.

Be sure to you get the orientation of **C6** correct.

Just a Refresher:
The polarity stripe on a radial electrolytic capacitor with always be on the same side as the negative lead

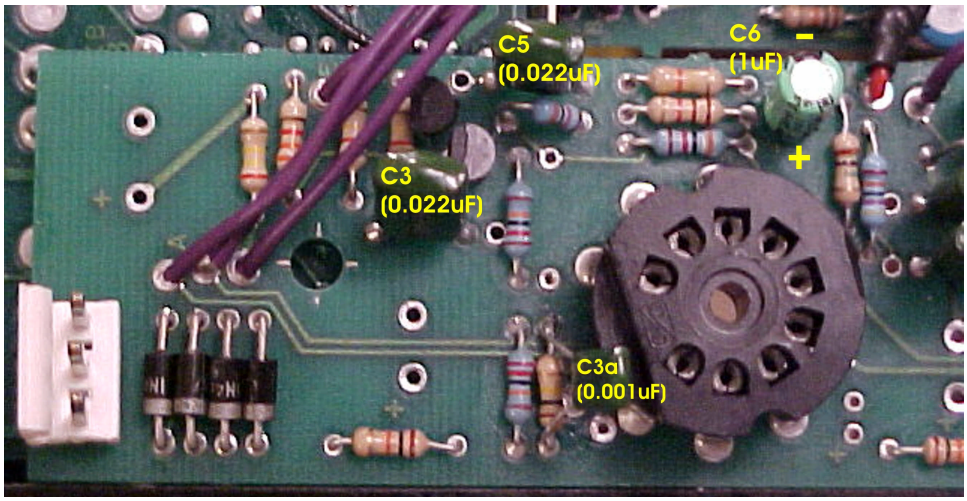

…and the right side

Again, be aware of the orientation of **C16** and **C12**

Also, the former location of **C7** will go unpopulated

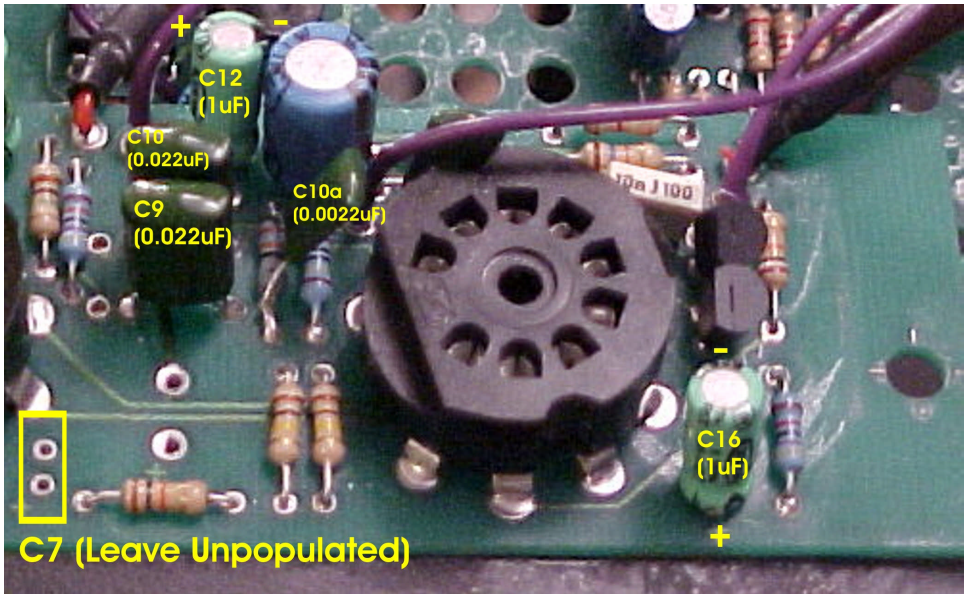

For capacitors **C3a** and **C10a** we must use another technique called **"Piggy-Backing"**. This is when a cap (or another standing component) is soldered directly to the leads of another component that is mounted close to the surface of the PCB.

Capacitor **C3a's** leads are soldered directly to **R3's** leads as shown in the pic to the right.

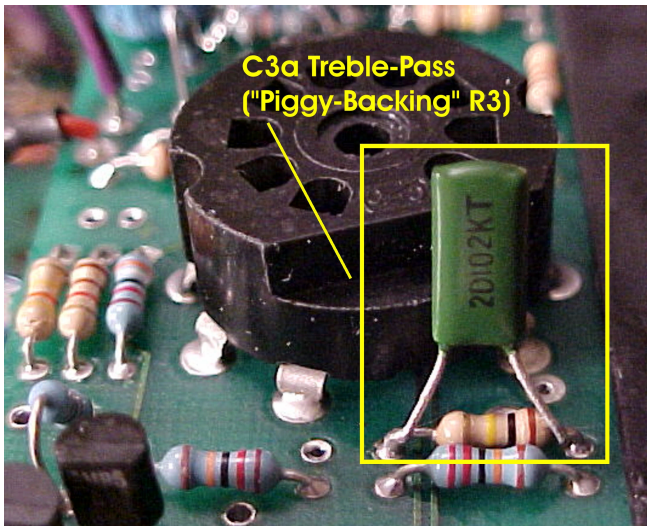

…and again, use the same technique for **C10a** Piggy-Backing **R20**

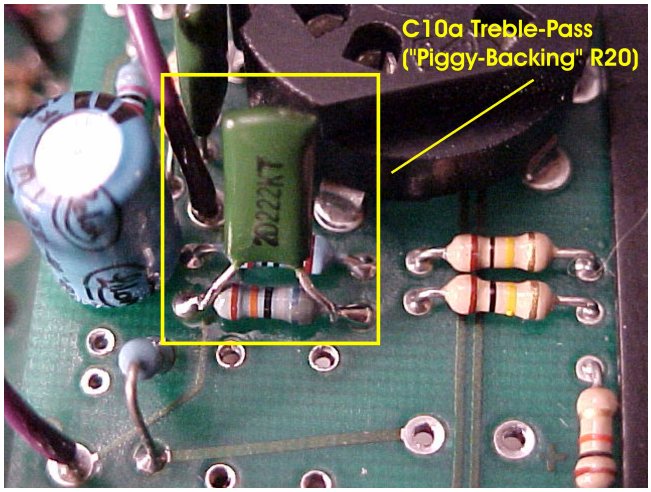

<u>OPTIONAL:</u>
Substituting **C10**, **C9**, **C3**, and **C5** with **Mallory 150s**:

Alternately, if you do decide to go with **Mallory 150s**, you must use the same **"Standing"** technique to install them as you did with resistors **R14a** and **R21a** previously.

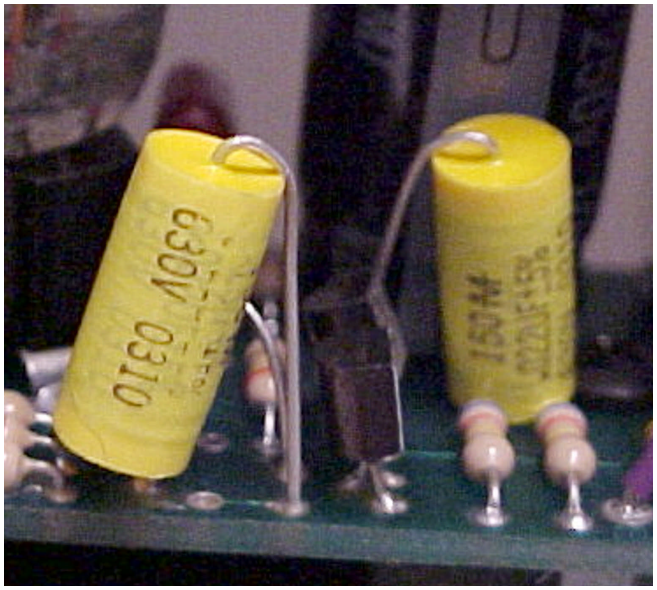

Step 7: Installing the Replacement OD2 Control Wire and Re-attaching the Tube-Board to the Chassis

Since the stock **OD2 Control Wire is** too short to reach all the way over to the first tube-socket on the underside of the **Tube-Board**, we must construct another replacement wire of similar characteristics:

1. The wire must have a **braided shield** running through the entire wire.
2. The shield wire must be grounded at the **Tube-Board** end and left un-attached at the main PCB.

You will need a length of shielded wire about 9 or 10 inches in length. **RG174 Coax** is my favorite of choice.

Strip off the insulation about ½" up at both ends to expose the signal wire and shield. Cut the shield braid flush with the insulation at one end. Strip the two ends of the signal wire leaving about 1/8" of exposed wire.

Use a couple of lengths of heat-shrink tubing to seal the insulation at both ends as shown in the pic to the right.

Next, tin the ends with a soldering iron. Also, be sure check with a Multi-Meter that there is no short between the shield and the signal wire.

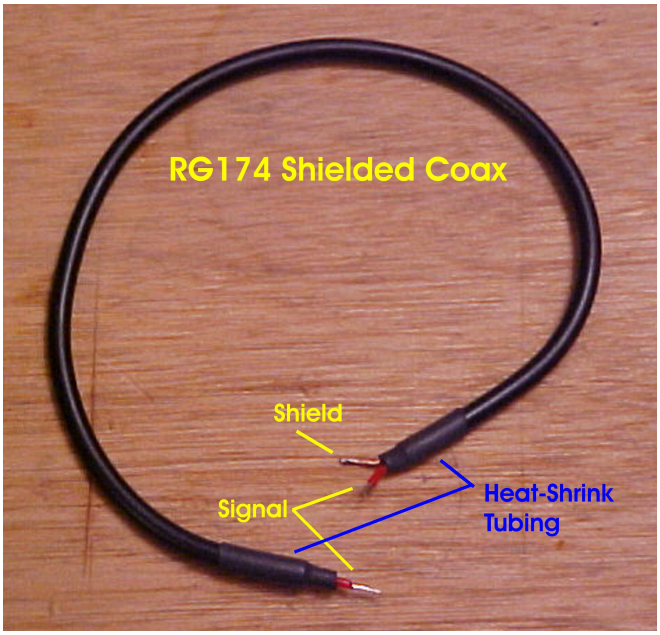

Attach the end with the shield braid exposed to the underside of the **Tube-Board**. The signal wire will be attached **to Pin "7"** of the 1st Tube-Socket, while the Shield needs to be attached **to Pin "6".**

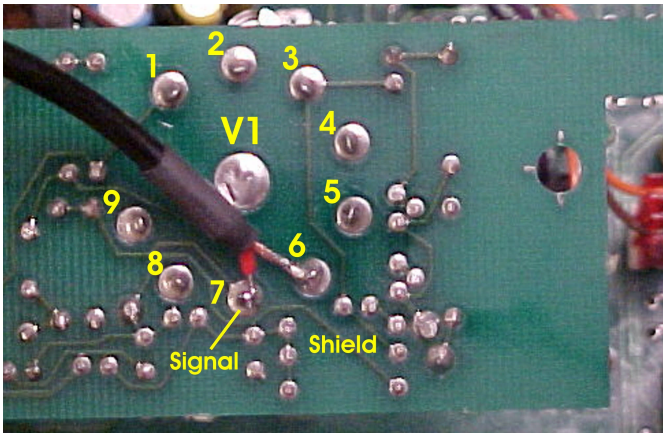

Fish the control wire around the left side of the **Tube-Board** and solder the opposite end to the main PCB at **Pad "H"**.

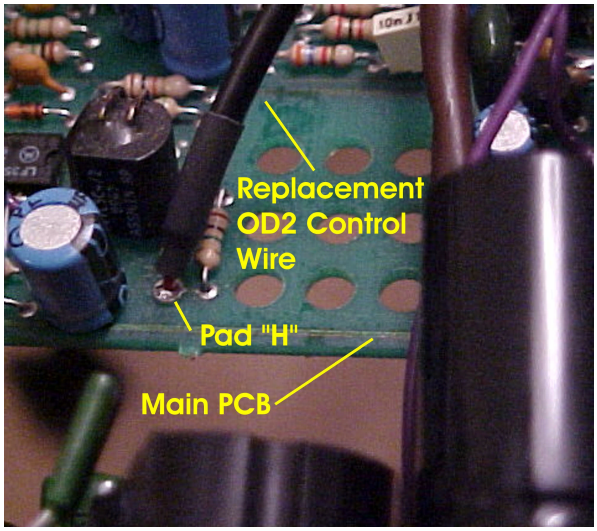

When you are finished here, use the toothbrush/naptha technique to clean off all the excess solder flux from the bottom of the Tube-Board PCB.

At this point, when you are satisfied with your work on the Tube-Board, you can go ahead and re-attach the Tube-Board stand-offs to the chassis. Do **NOT** reinstall the tubes just yet.

Step 8: De-soldering Resistor R74 and the OD1 Trimpot (T2) from the main PCB

This next part of the mod involves replacing the **OD1 Trimpot (T2)** with a higher value and jumpering the location of **R74**. This part of the circuit is based around an Op-amp gain stage that directly pushes the first tube stage.

What we will be doing here is removing the gain minimizing resistor **R74** and increasing the **OD1 Trimpot's** value from 20k to 500k.

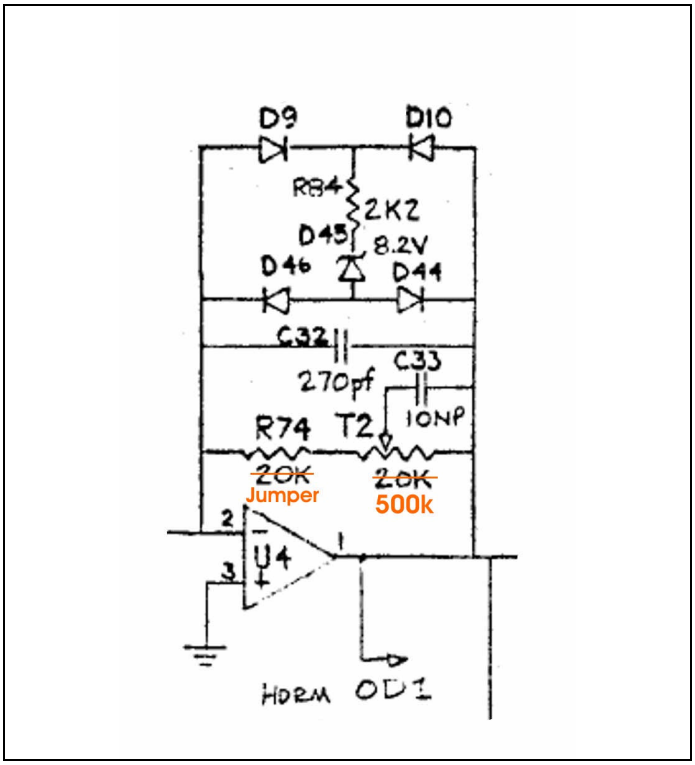

This is essentially an Inverting Op-amp stage with variable gain. I won't get too technical here into Op-amp theory, but simply stated, the more resistance in an inverting Op-amp feedback loop, the greater the gain (up to a certain point).

This does two things. First, it allows us to increase the resistance in the feedback loop almost 20 times, hence a higher gain signal will get fed to the first tube-stage. Second, with the minimizing resistor gone, we can now *"dial-down"* the gain if this stage already has adequate gain and is causing clipping issues.

OD1 Trimpot T2 and resistor **R74** are to be removed from the main PCB.

Pic of **T2** and **R74** to be removed.

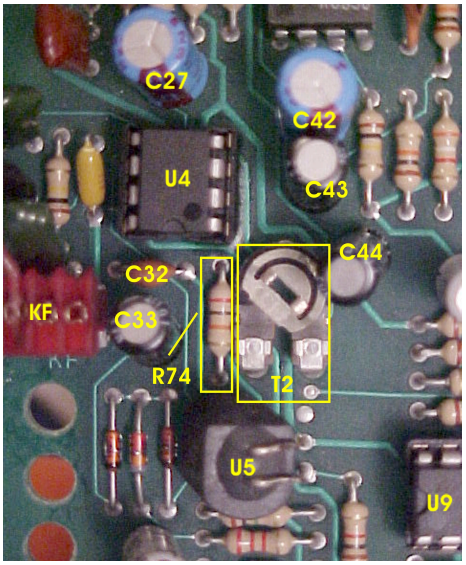

Pic of solder (under) side of the main PCB with component locations labeled.

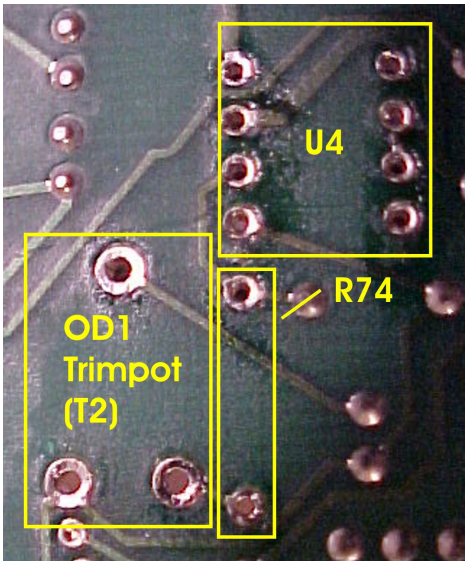

After the components are removed from the main PCB, continue using the solder-sucker and de-soldering braid to completely open and clean-up the through-holes of any excess solder.

Step 9: Soldering a Jumper Wire in place of R74 and replacing T2 with a higher value

Pic of unpopulated PCB locations for **R74** and **T2.**

<u>Note:</u>
Surrounding components are labeled for reference.

Op-amp locations **U4** and **U9** are currently unpopulated also, due to another mod being performed at the same time.

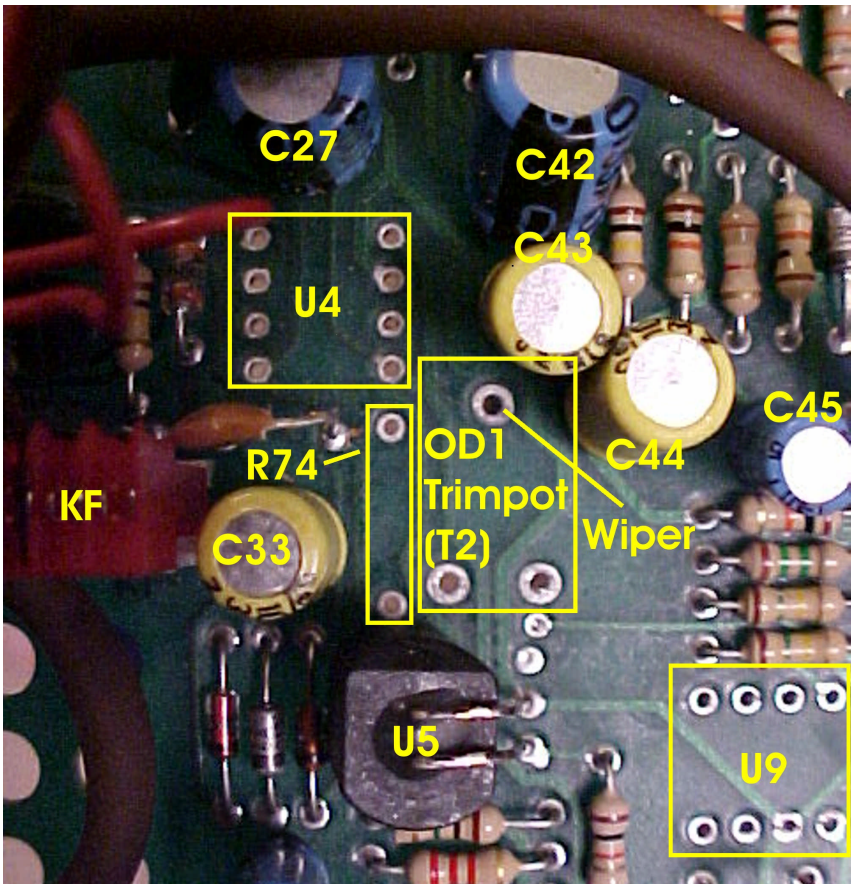

Pic of finished job.

YUMMY!

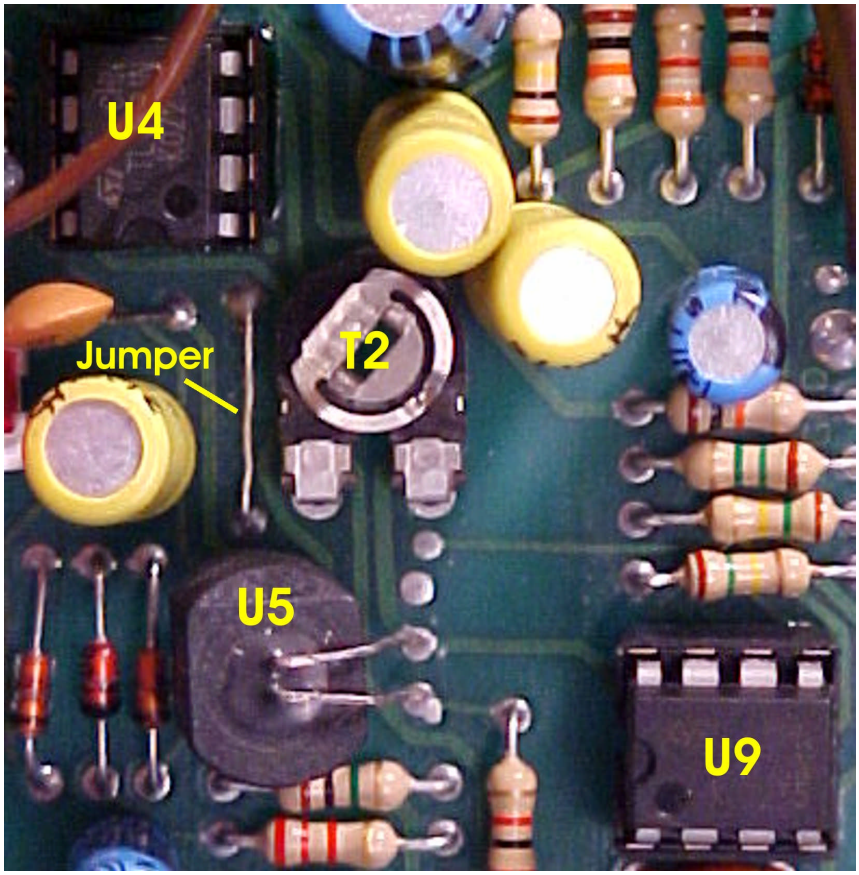

Step 10: Removing the EQ Section Components to be Replaced

Here is a little background behind the **EQ Mod** incorporated into the **MOD3.666**:

a) The **"Treble" EQ Circuit** is optimized.

b) The **"Bass" EQ Circuit** is optimzed to include what I call the "**BASS WARP**" control. This is simply a trimpot that allows you to raise or lower the target frequency of the **MP-1 Bass EQ Control** to better match the resonant frequency of your cab. Simply put, it gives you the ability to optimize the "thump" frequency of your 4x12 making the bass response sickly tight.

c) The **"Mid" EQ Circuit** is modded to include a wider (and better!) range of frequencies, particularly those that are infamously "scooped" out of the Mesa tone you hear all the time. The "**Mid" EQ Circuit** was also modded to include a trimpot control ("**MID-SCOOP**"), but this time it allows you to variably change the amount of cut/boost of the **MP-1 "Mid" Control** from **+/-12dB** to somewhere in the **+/-30dB** range. The amount if midrange you can scoop from the circuit is almost frightening!

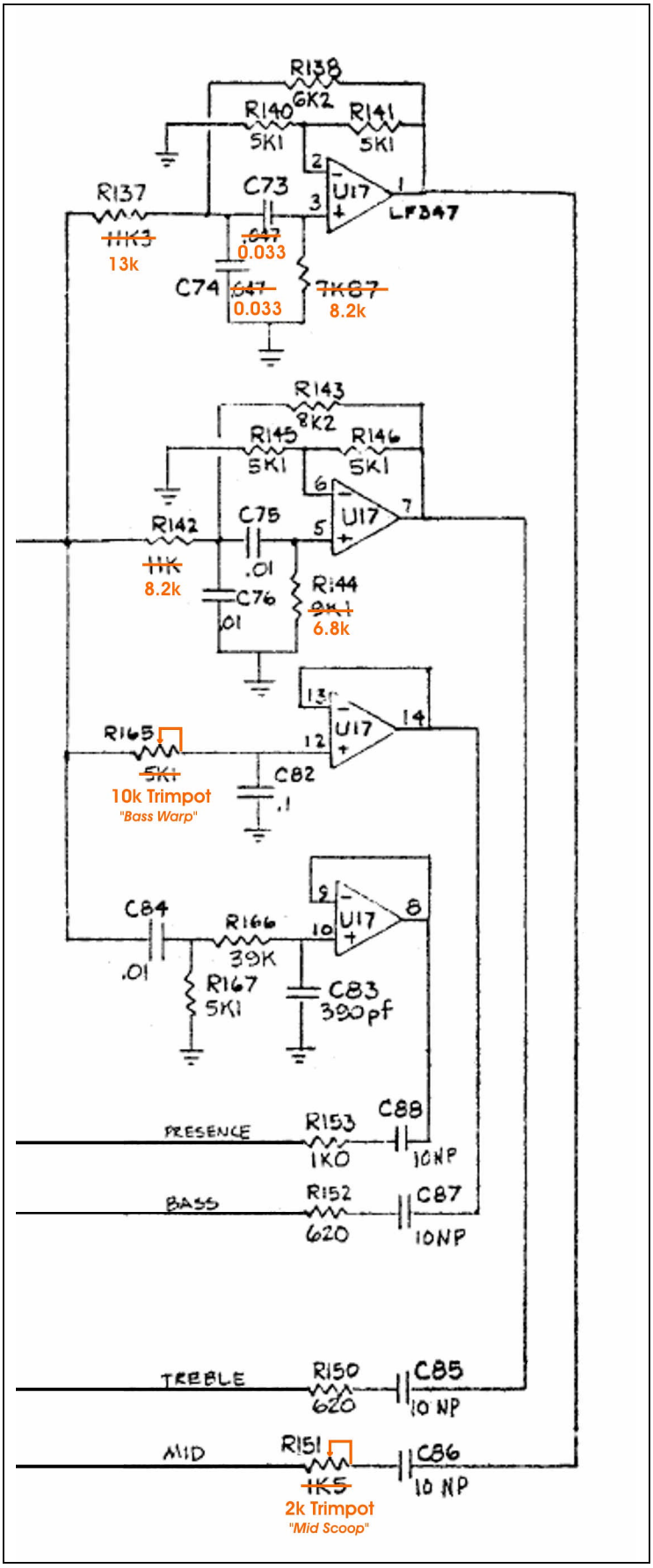

Pic of the **MP-1 EQ Section** with the components to be removed labeled.

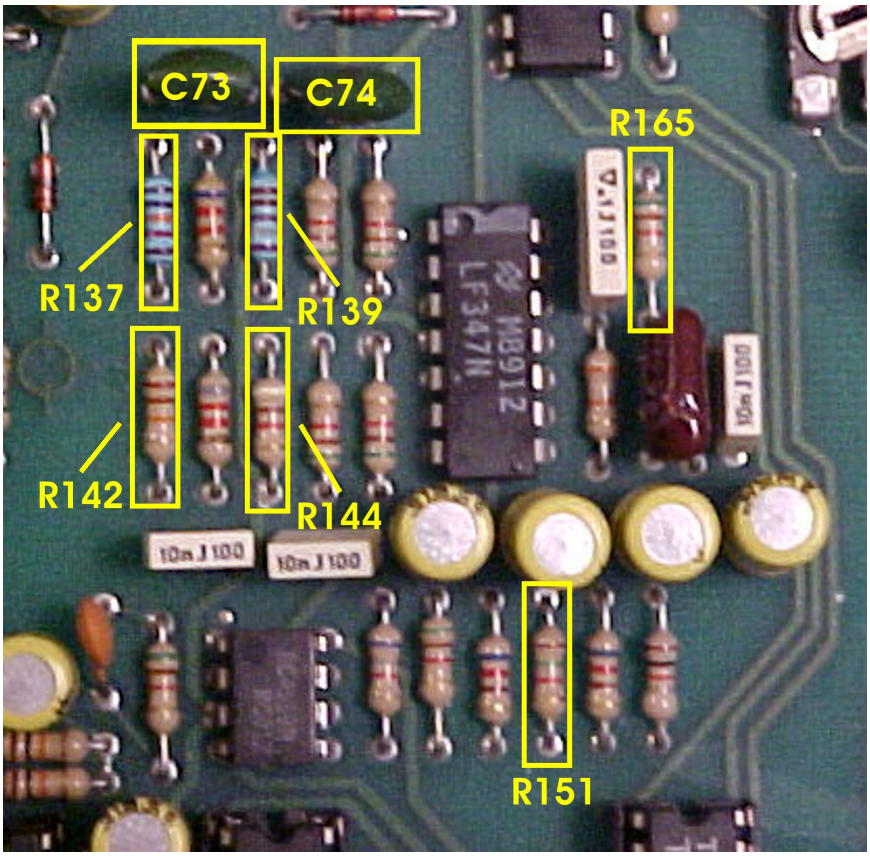

Pic of unpopulated **EQ Section** with all the pads and through-holes cleaned of any excess solder

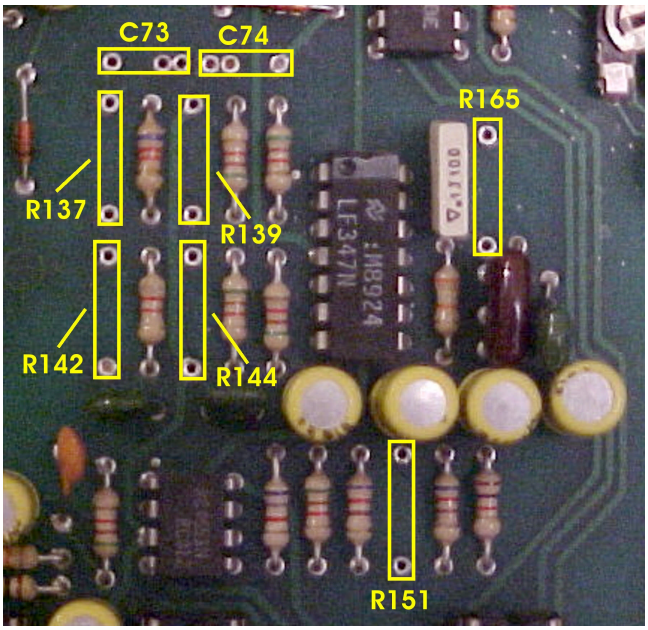

Pic of the underside (solder-side) of the **EQ Section** on the main PCB

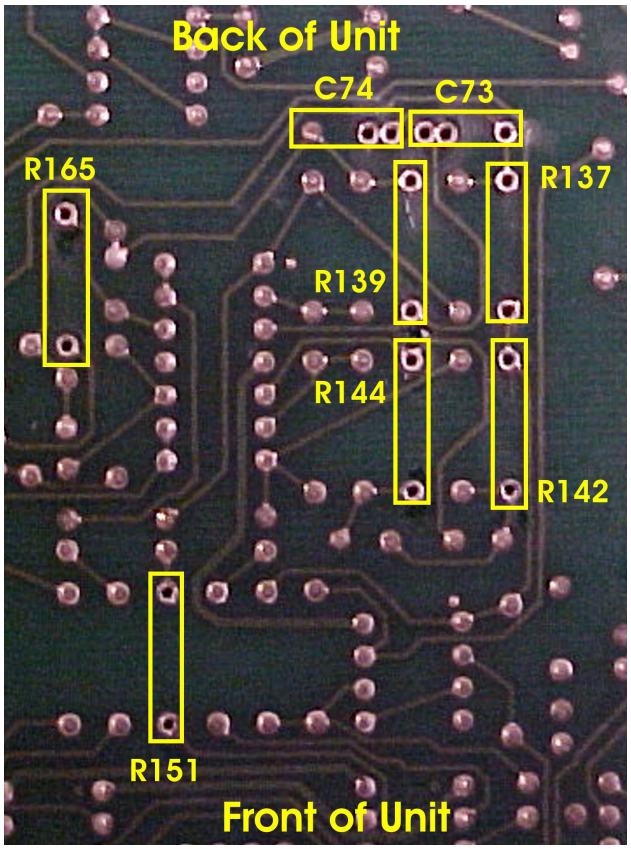

Step 11: Installing the Replacement Resistors and Capacitors to the EQ Section

Here is a list of all replacement resistors and capacitors to the EQ section and their values:

Component Label:	Original Value:	Replacement Value:
R137	11.3k	13k
R139	7.87k	8.2k
R142	11k	8.2k
R144	9.1k	6.8k
R165	5.1k	10k Trimpot
R151	1.5k	2k Trimpot
C73	0.047µF	0.033µF/100v
C74	0.047µF	0.033µF/100v

This is pretty self-explanatory.

Just make sure you are putting the correct replacement resistors in the correct locations.

If in doubt, **ALWAYS** test with a Multi-Meter first, don't always rely on the color-coding.

If you aren't careful, your new **MOD3.666** MP-1 could sound like a bad 3-tube mod gone horribly awry!

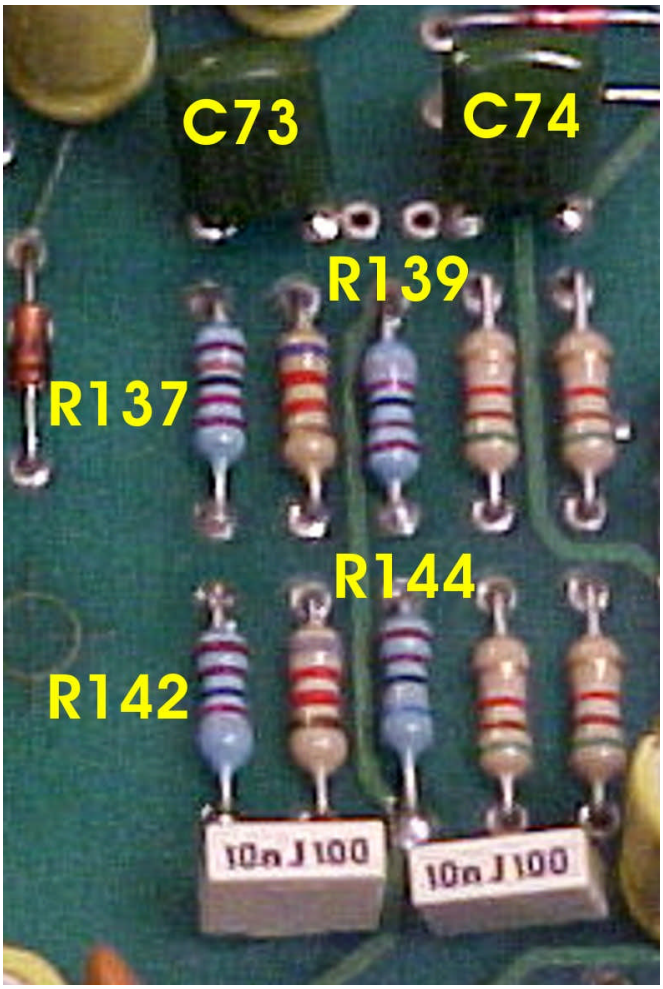

Step 12: Installing the Custom Trimpots to the EQ Section

Since we will be replacing 1/4W resistors with trimpots, we must get a little creative to make them fit. The trimpots I recommend using are from Mouser and are Vishay 3/8" Square. These are great trimpots. I use them on all my homebrew stompboxes or any other piece of gear I want to violate. Not only are they very high quality, they also have bendable lead terminals with plenty of length.

Since we will be using these trimpots as **"variable resistors"** so to speak, we must mod them a little to assure a smooth linear taper. Simply put, we must short the **Wiper Terminal (#2)**, with the **Clockwise Terminal (#3)**.

Here is a pic of the lead terminals of the "**MID-SCOOP**" trimpot (2k).

Notice how **Terminal #2** gets bent over and soldered to the base of **Terminal #3.**

Also take notice of how **Terminals #1** and **#3** are creatively bent to fit in the lead spacing of a 1/4W resistor.

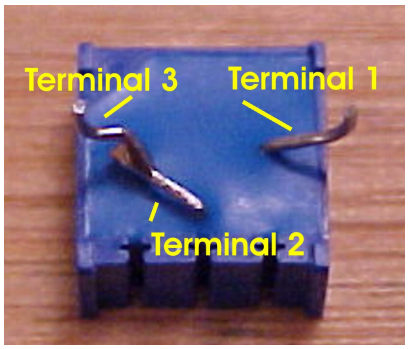

The same goes for the "**BASS-WARP**" trimpot (10k).

Again, check out the cunningly creative lead bends.

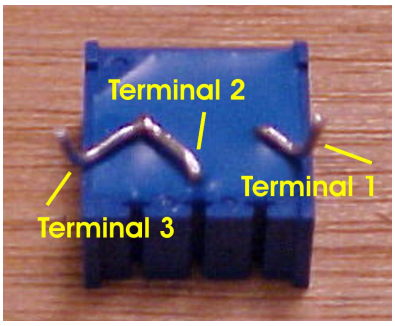

After the "**BASS-WARP**" trimpot is ready to be installed onto the PCB, take your **Multi-Meter** and attach the two probes to **Terminals #1** and **#3**.

With a miniature screwdriver, turn the trimpot dial until the MM reads right around 5.1k. Take a Sharpie and mark this position similar to what's shown on the pic to the right.

The mark will allow you to set the bass target frequency back to stock to use as a starting point for later testing.

Here is a pic of the finished modded EQ section.

Looks good!

Man, talk about the electronic Mona Lisa!

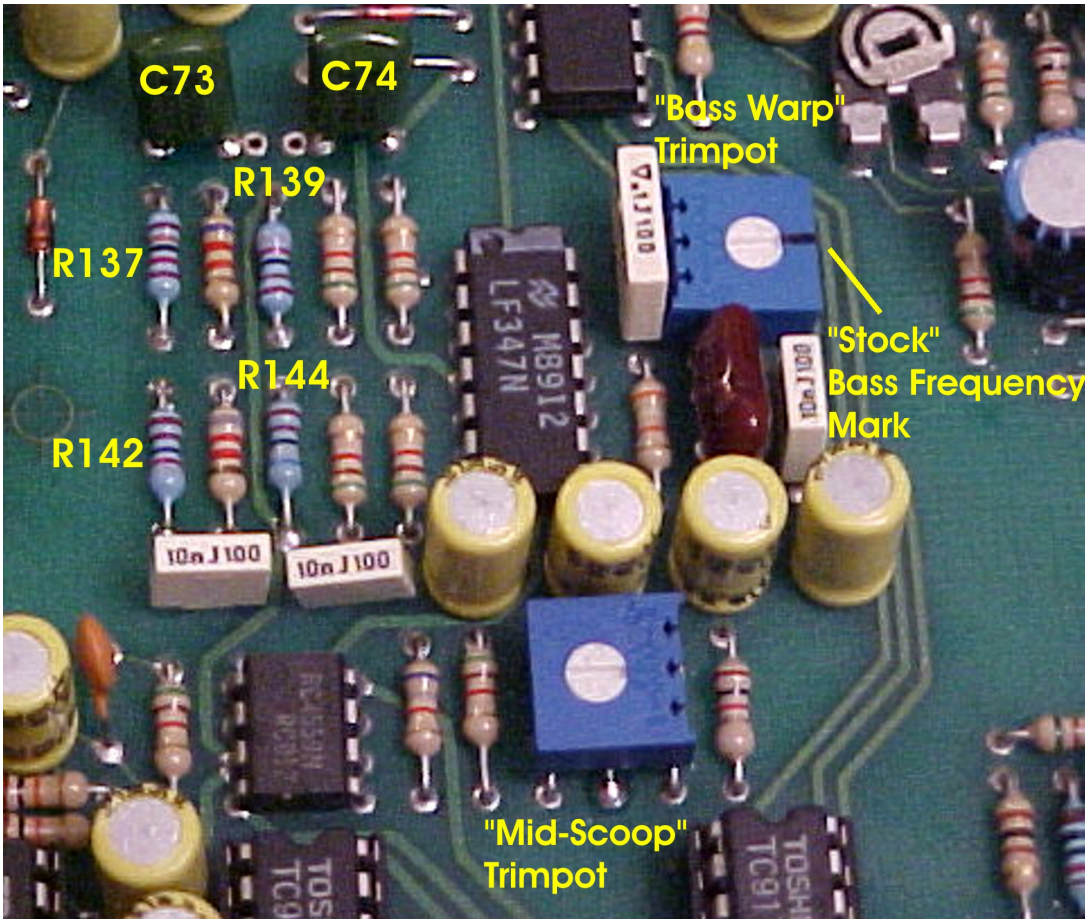

When you are finished here, use the toothbrush/naptha technique to clean off all the excess solder flux from the bottom of the main PCB.

YOU ARE ALMOST DONE! Re-install your tubes as well as the bottom panel. Do **NOT** re-install the top panel just yet.

Step 13: Tweaking the Custom Trimpots:

1) Plug your MP-1 back into your rig, make sure you have ample access to the top of the unit.

2) Dial up this setting on your **MOD3.666 MP-1**:

Voicing: Tube Distortion
OD1: 5.0
OD2: 7.5
Master Gain: 5.0
Bass: 16
Mid: -12
Treble: 2 (or 4)
Presence: 12 (or 10)
Effects Loop: Out
Chorus Depth: 0
Chorus Rate: 0.0

Use this patch to set the trimpots to get that "evil" Mesa tone. I call this patch **"BLOOD VESSEL BURST"**. It should be considered the extreme patch setting of the **MOD3.666.** All other rhythm (or lead) patches should use this patch as a starting point.

3) Locate the **Input Stage Gain Trimpot.** It located between the tubes, to the middle-left of the unit looking down.

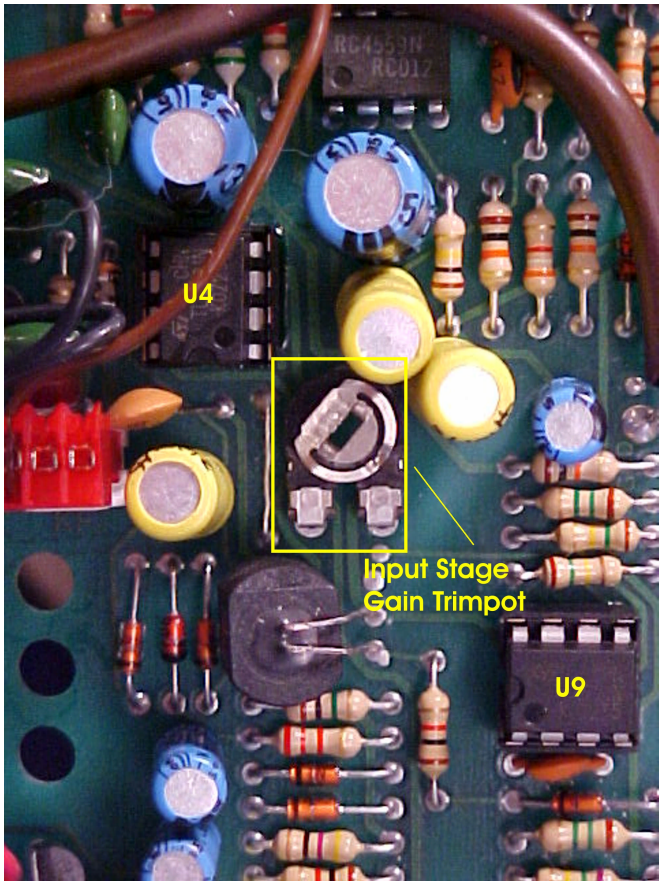

4) Grab your main axe, switch to your bridge pickup, and turn the guitar's volume control to **11**.

5) While you are doing palm mutes and/or heavy open chords ("**Pull Me Under**" is a good riff to test with BTW), have your little brother turn the trimpot dial with a miniature screwdriver until the **OD1 Clipping LED** lights up frequently on downstrokes, but doesn't stay lit all the time.

You will notice at this point that your artificial "pinch" harmonics will squeal with little or no effort.

6) Locate the **BASS-WARP Trimpot** and the **MID-SCOOP Trimpot.** They are both located right smack dab in the middle of the main PCB looking down.

With a small miniature screwdriver, set the **BASS-WARP** trimpot to the **Stock Bass Frequency Mark.**

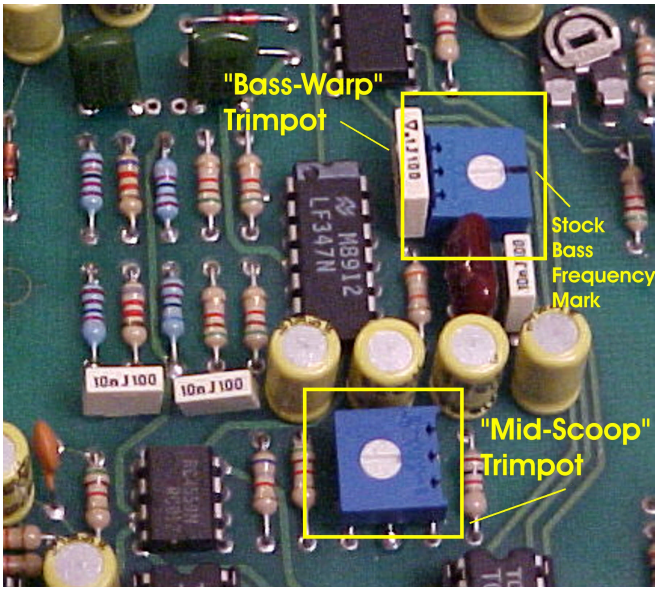

7) Again, while you are doing heavy palm mutes and open chords, turn the **MID-SCOOP Trimpot** dial until you are satisfied with the amount mids sucked out of the circuit. This is what gives the mod it's **"evil edge"**. You may also need to adjust the **Main Output Level Control** along the way to compensate for the mass attenuation of the midrange frequencies.

8) Next, you will really need to crank up your rig to set the **BASS-WARP Trimpot**. Turning the pot either way raises or lowers the roll-off frequency of the MP-1 Bass control. At this point, turn it fully extreme to the lowest bass frequency, it should sound muddy at this point.

9) While doing heavy palm-mutes again, slowly turn this pot until the muddiness disappears. This allows you achieve a truly sick tight "thumping" bass sound. Every cabinet and power-amp are different, so this will need to be re-tweaked if you decide to switch rigs.

PLEASE NOTE:
IF YOU ARE USING ANY OTHER CABINET BESIDES A CLOSED-BACK 4X12, YOU MAY NOT EVEN BE HEARING THE TRUE POTENTIAL OF THIS DEMONIC BEAST!

THAT'S IT!

Re-install the top panel and you are good to go!

Now, crank the bitch up and scare away all the small furry animals in the near vicinity!

Appendix: Colors and Codes and for Resistors and Capacitors

Resistors:

Component Label:	Value:	1% Color Code:	5% Color Code:
Tube-Board:			
R13	220k	Red, Red, Black, Orange	Red, Red, Yellow
R2	220k	Red, Red, Black, Orange	Red, Red, Yellow
R15	39k	Orange, White, Black, Red	Orange, White, Orange
R19	470k	Yellow, Violet, Black, Orange	Yellow, Violet, Yellow
R21	1M	Brown, Black, Black, Yellow	Brown, Black, Green
R7	47k	Yellow, Violet, Black, Red	Yellow, Violet, Orange
R23	47k	Yellow, Violet, Black, Red	Yellow, Violet, Orange
R14a	330k	Orange, Orange, Black, Orange	Orange, Orange, Yellow
R21a	2.2M	Red, Red, Black, Yellow	Red, Red, Green
R20	680k	Blue, Gray, Black, Orange	Blue, Gray, Yellow
EQ Circuit:			
R137	13k	Brown, Orange, Black, Red	Brown, Orange, Orange
R139	8.2k	Gray, Red, Black, Brown	Gray, Red, Red
R142	8.2k	Gray, Red, Black, Brown	Gray, Red, Red
R144	6.8k	Blue, Gray, Black, Brown	Blue, Gray, Red

Capacitors:

Component Label:	Value (µF):	Value (nF):	Code:
Tube-Board:			
C10	0.022	22	223
C9	0.022	22	223
C3	0.022	22	223
C5	0.022	22	223
C6	1	1000	105
C16	1	1000	105
C12	1	1000	105
C10a	0.0022	2.2	222
C3a	0.001	1	102
EQ Circuit:			
C73	0.033	33	333
C74	0.033	33	333